Electrical Enclosure Accessories

IP-PMP

STEEL | U-CHANNEL PROFILES

Suited for Electrical Enclosures

IP Enclosures steel U-Channel Profile Mounting Rails are structural mounting members engineered for pole-mounted electrical enclosure installations. They are designed to interface with pole mounting brackets. The U-profile rail provides high mechanical strength, effective load distribution, and adjustable fixing locations for secure attachment to utility poles and column structures. The reinforced channel section offers excellent resistance to bending and torsional stresses, ensuring long-term stability and reliability in demanding outdoor electrical, telecommunications, and infrastructure installations.

Material:
- Body: 2.5mm Galvanised steel sheet.

Surface Treatment: UL approved AkzoNobel epoxy polyester powder coated with a textured finish. 80-120 micron average thickness.

Standard Colour: RAL7035 Light Grey.

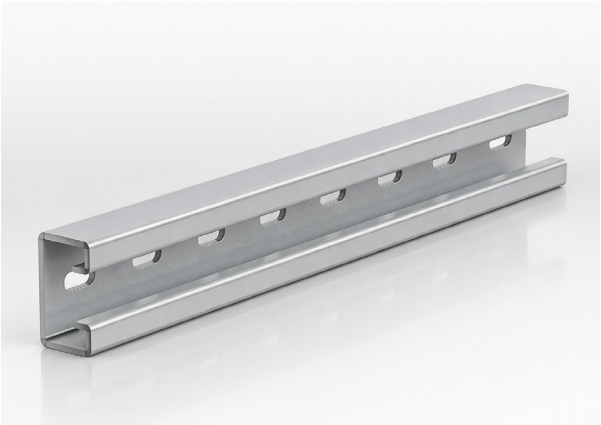

Image shown is for reference only.
See the table below for accurate sizes and specifications.

Part Number	Size	Description	Weight
SKU	H x L (mm)		Kilogram (Kg)
IP-PMP200	52mmH x 200mmL	U-Channel Profile 200mm Long - Powdercoated	0.5
IP-PMP300	52mmH x 300mmL	U-Channel Profile 300mm Long - Powdercoated	0.8
IP-PMP400	52mmH x 400mmL	U-Channel Profile 400mm Long - Powdercoated	1
IP-PMP500	52mmH x 500mmL	U-Channel Profile 500mm Long - Powdercoated	1.3
IP-PMP600	52mmH x 600mmL	U-Channel Profile 600mm Long - Powdercoated	2

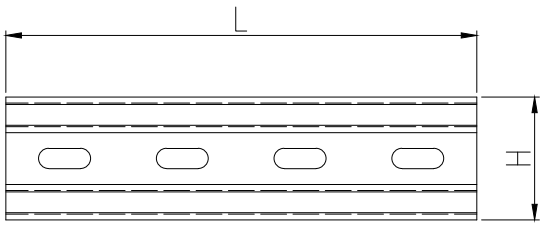

FRONT VIEW

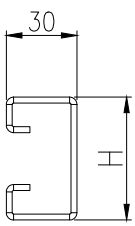

SIDE VIEW

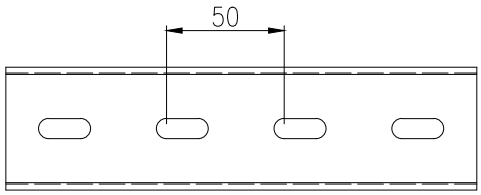

REAR VIEW

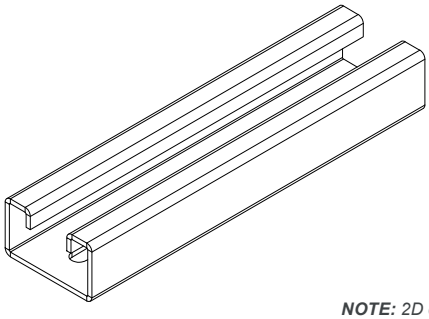

NOTE: *2D drawing is for reference only.*
See CAD files for sizes and specifications.

© IP Enclosures 2026