Electrical Cabinet Accessories

IP-SHL

STEEL | SHELF KITS

Suited for Floor Standing Cabinets

IP Enclosures provide a range of shelf kits for floor standing electrical cabinets. Shelf systems have many uses and can be used for component separation and battery storage.

Material:
- Body: 2.0mm Galvanised steel sheet.

Surface Treatment: UL approved AkzoNobel epoxy polyester powdercoated with a textured finish. 80-120 micron average thickness.

Standard Colour: RAL7035 Light Grey.



Image shown is for reference only.
See the table below for accurate sizes and specifications.

Part Number	Size	Description	Weight
SKU	W x D (mm)		Kilogram (Kg)
IP-SHL6060	480W x 597D	Shelf System for 600Wx600D Floor-Standing Electrical Cabinet	6.5
IP-SHL6080	480W x 797D	Shelf System for 600Wx800D Floor-Standing Electrical Cabinet	8
IP-SHL8060	680W x 597D	Shelf System for 800Wx600D Floor-Standing Electrical Cabinet	8.5
IP-SHL8080	680W x 797D	Shelf System for 800Wx800D Floor-Standing Electrical Cabinet	11
IP-SHL10060	880W x 597D	Shelf System for 1000Wx600D Floor-Standing Electrical Cabinet	11
IP-SHL10080	880W x 797D	Shelf System for 1000Wx800D Floor-Standing Electrical Cabinet	14

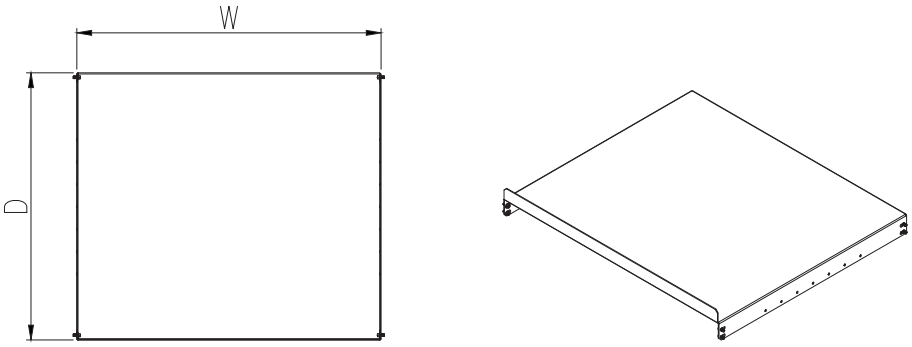

TOP VIEW

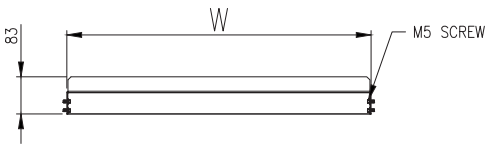

FRONT VIEW

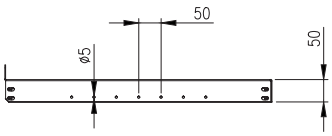

RIGHT SIDE VIEW

NOTE: *2D drawing is for reference only.*
See CAD files for sizes and specifications.

© IP Enclosures 2026