RevNo	Revision note	Date	Signature	Checked
1	GENERAL REVISION	30/07/26	IP	IP

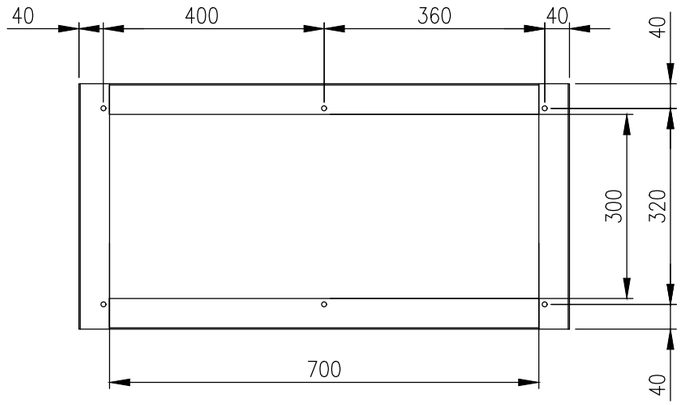

TOP VIEW

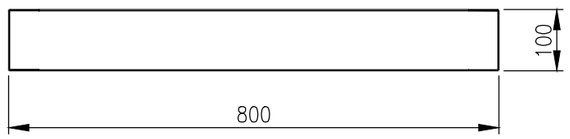

FRONT VIEW

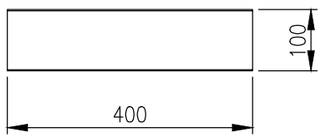

SIDE VIEW

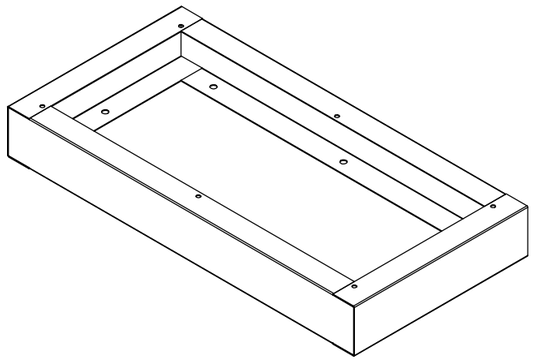

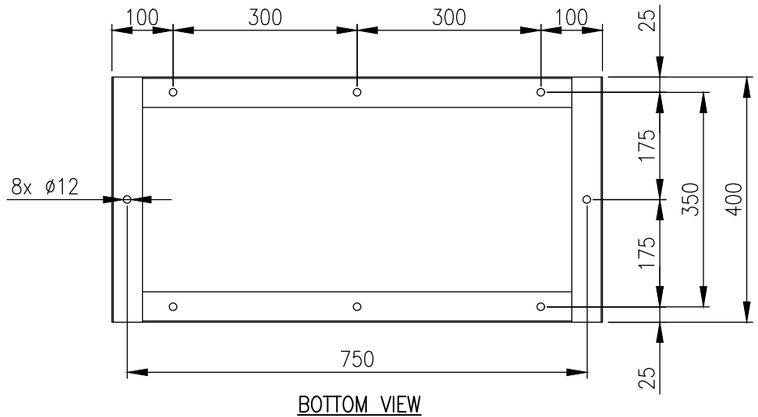

BOTTOM VIEW

MATERIAL:
BODY: 2.0mm GRADE 316L STAINLESS STEEL

MASS: 6.0Kg.

© IP ENCLOSURES 2026.
THIS DRAWING SHALL NOT BE COPIED OR REPRODUCED
WITHOUT AUTHORISATION FROM IP ENCLOSURES.
www.ipenclosures.com.au

Itemref	Quantity	Title/Name, designation, material, dimension etc			Article No./Reference
Designed by IP	Checked by IP	Approved by - date 30/07/24	Filename IP-SSPLINTH8040	Date 30/07/24	Scale 1:10
IP Enclosures		800Wx400D STAINLESS STEEL PLINTH			
		IP-SSPLINTH8040		Edition 1	Sheet 1/1