RevNo	Revision note	Date	Signature	Checked
1	GENERAL REVISION	31/07/26	IP	IP

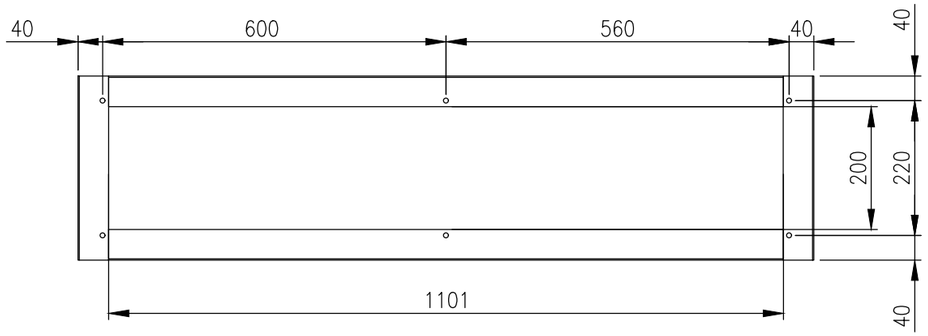

TOP VIEW

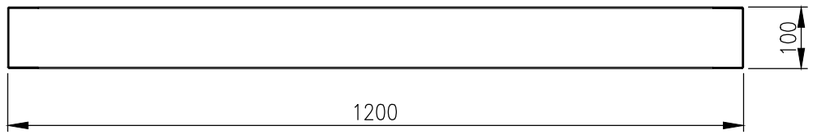

FRONT VIEW

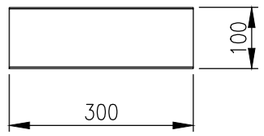

SIDE VIEW

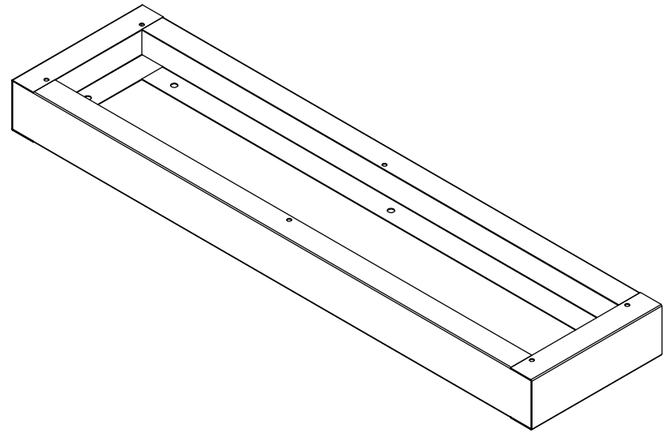

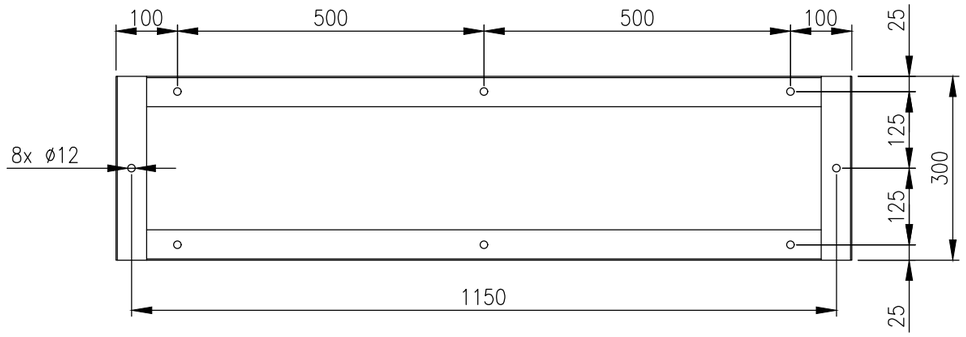

BOTTOM VIEW

MATERIAL:
BODY: 2.0mm GRADE 316L STAINLESS STEEL

MASS: 7.0Kg.

© IP ENCLOSURES 2026.
THIS DRAWING SHALL NOT BE COPIED OR REPRODUCED
WITHOUT AUTHORISATION FROM IP ENCLOSURES.
www.ipenclosures.com.au

Itemref	Quantity	Title/Name, designation, material, dimension etc		Article No./Reference	
Designed by IP	Checked by IP	Approved by - date 19/01/24	Filename IP-SSPLINTH12030	Date 19/01/24	Scale 1:10
IP Enclosures		1200Wx300D STAINLESS STEEL PLINTH			
		IP-SSPLINTH12030		Edition 1	Sheet 1/1