RevNo	Revision note	Date	Signature	Checked

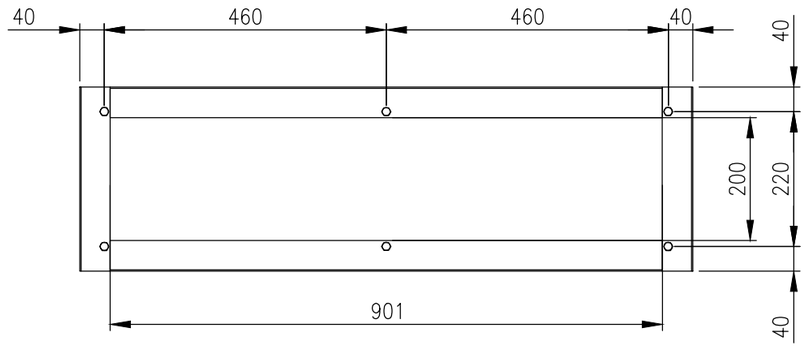

TOP VIEW

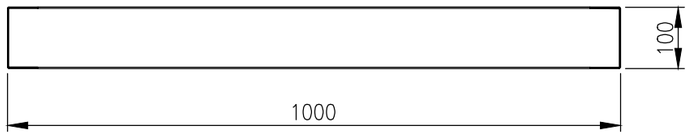

FRONT VIEW

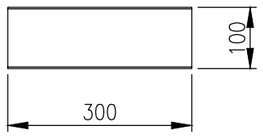

SIDE VIEW

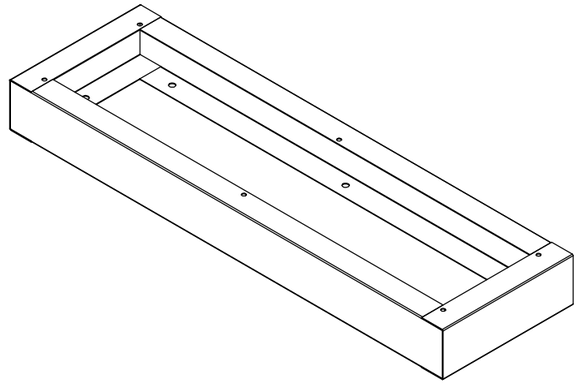

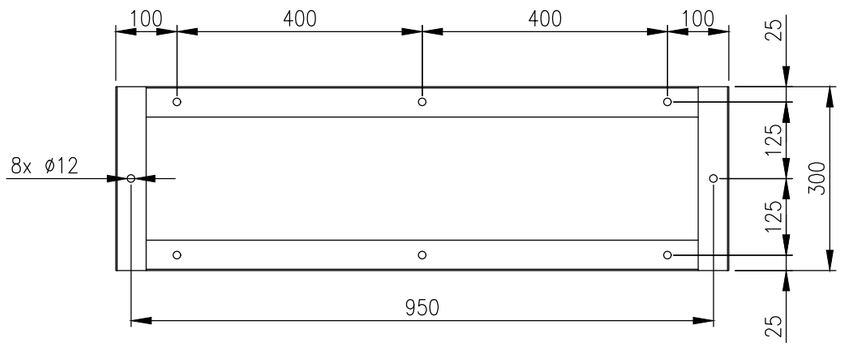

BOTTOM VIEW

MATERIAL:
BODY: 2.0mm GRADE 316L STAINLESS STEEL

MASS: 6.0Kg.

© IP ENCLOSURES 2026.
THIS DRAWING SHALL NOT BE COPIED OR REPRODUCED
WITHOUT AUTHORISATION FROM IP ENCLOSURES.
www.ipenclosures.com.au

Itemref	Quantity	Title/Name, designation, material, dimension etc			Article No./Reference
Designed by IP		Checked by IP	Approved by - date 30/07/26	Filename IP-SSPLINTH10030	Date 30/07/26	Scale 1:10

IP Enclosures

1000Wx300D STAINLESS STEEL PLINTH

IP-SSPLINTH10030 | Edition 0 | Sheet 1/1