RevNo	Revision note	Date	Signature	Checked

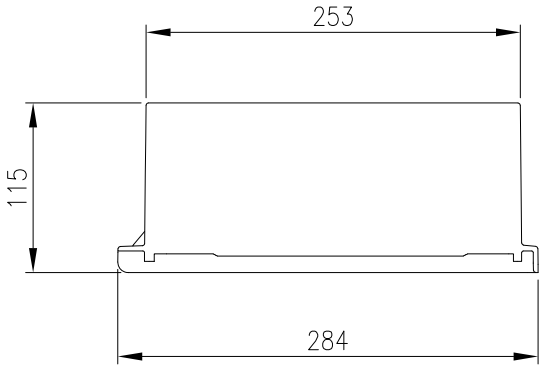

TOP VIEW

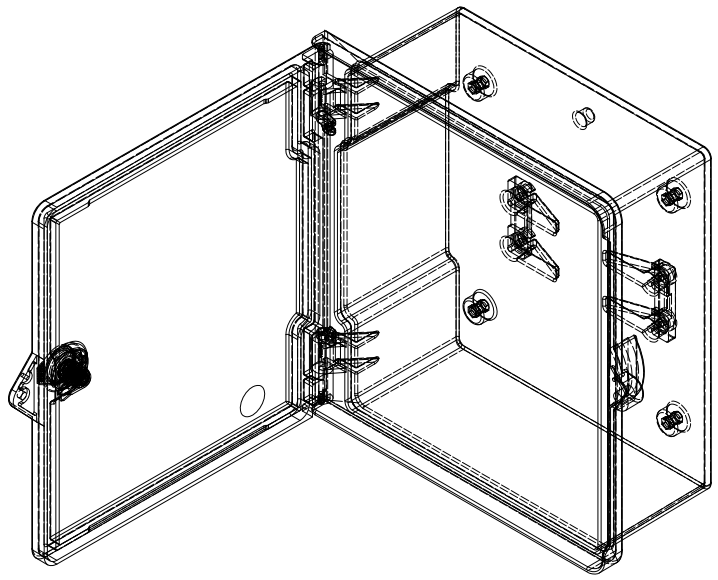

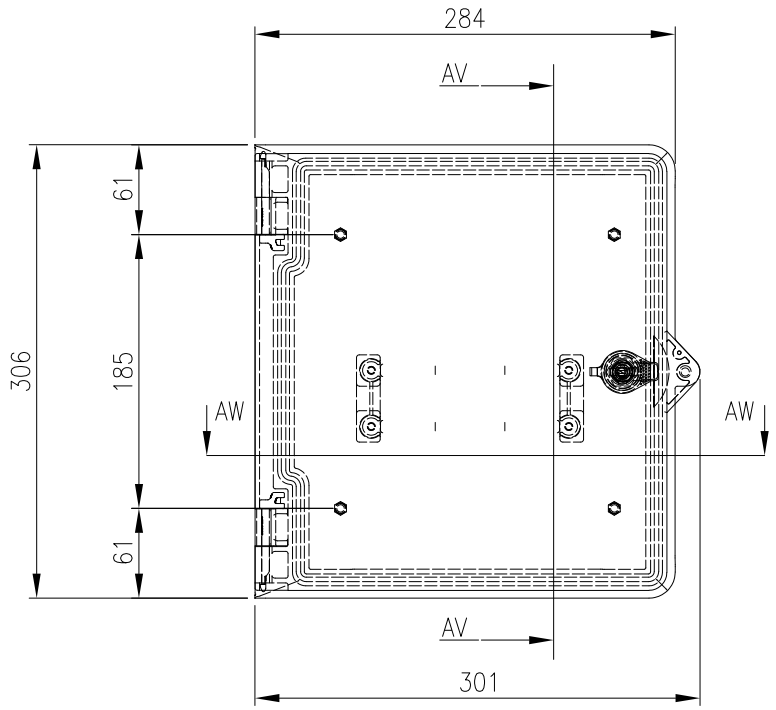

FRONT VIEW

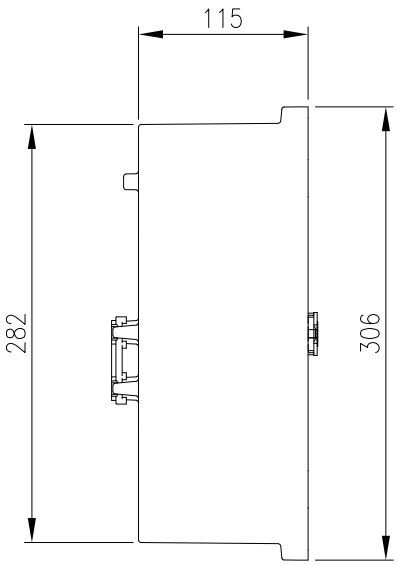

SIDE VIEW

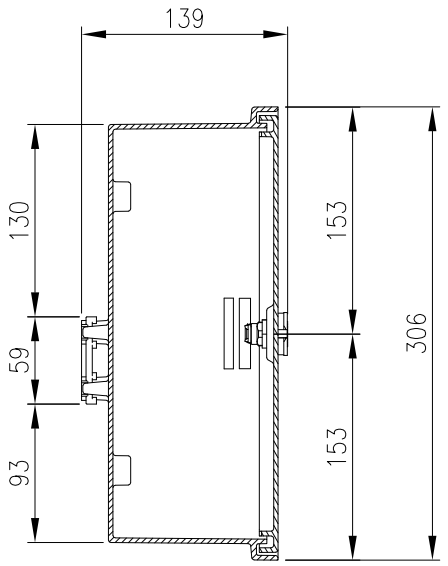

SECTION AV–AV

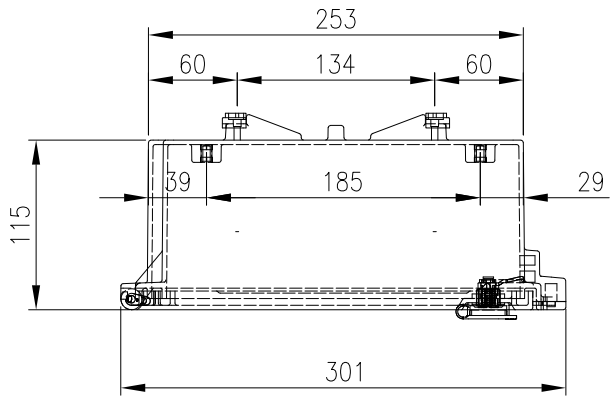

SECTION AW–AW

MATERIAL
BODY: GLASS–FIBRE REINFORCED POLYESTER (GRP)
DOOR: GLASS–FIBRE REINFORCED POLYESTER (GRP)
DEVICE PLATE: POLYESTER
SEAL: POLYURETHANE

PROTECTION: IP66
STANDARD: IEC62208, IEC/EN/AS60529

© IP ENCLOSURES 2016.
THIS DRAWING SHALL NOT BE COPIED OR REPRODUCED
WITHOUT AUTHORISATION FROM IP ENCLOSURES.
www.ipenclosures.com.au

Itemref	Quantity	Title/Name, designation, material, dimension etc			Article No./Reference	
Designed by IP		Checked by IP	Approved by - date 13/04/21	Filename IP–GRP303010–B	Date 13/04/21	Scale 1:5
Enclosures		306H x 284W x 115D GRP ENCLOSURE				
		IP–GRP303010–B			Edition 0	Sheet 1/1