RevNo	Revision note	Date	Signature	Checked
0	GENERAL REVISION		IP	IP

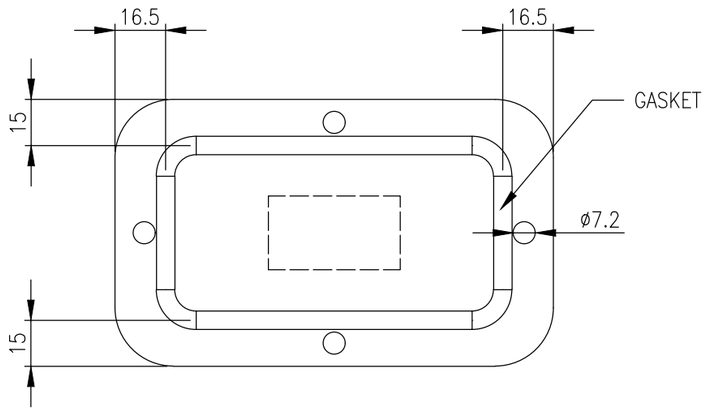

TOP VIEW

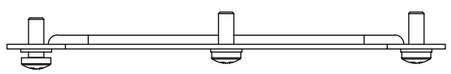

FRONT VIEW

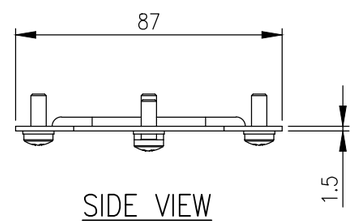

SIDE VIEW

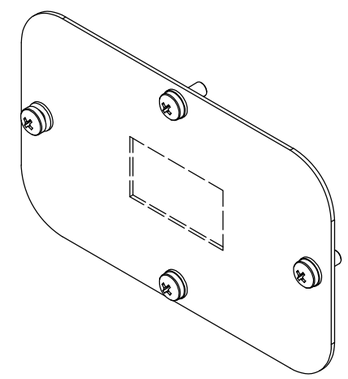

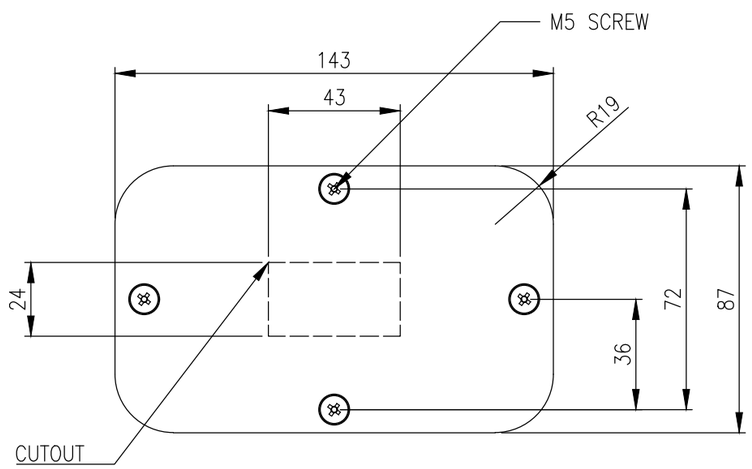

BOTTOM VIEW

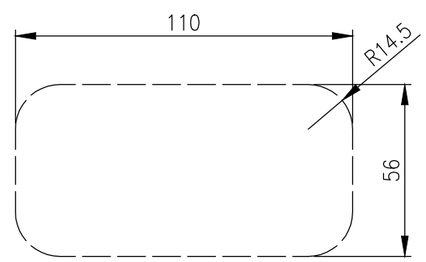

OPENING SIZE

MATERIAL
BODY: 1.5mm GALVANISED STEEL SHEET
SURFACE TREATMENT: POWDER-COAT 80-120micron
COLOUR: RAL7035 LIGHT GREY

MASS: 0.2Kg.

© IP ENCLOSURES 2026.
THIS DRAWING SHALL NOT BE COPIED OR REPRODUCED
WITHOUT AUTHORISATION FROM IP ENCLOSURES.
www.ipenclosures.com.au

Itemref	Quantity	Title/Name, designation, material, dimension etc			Article No./Reference
Designed by IP	Checked by IP	Approved by - date 08/05/26	Filename IP-GPSE2-1	Date 08/05/26	Scale 1:2
Enclosures		143Wx87D GLAND PLATE with CUTOUT			
		IP-GPSE2-1		Edition 0	Sheet 1/1