RevNo	Revision note	Date	Signature	Checked
0	GENERAL REVISION		IP	IP

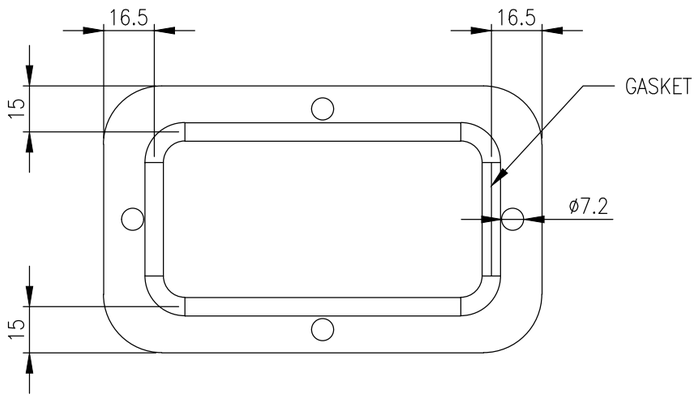

TOP VIEW

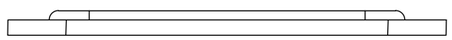

FRONT VIEW

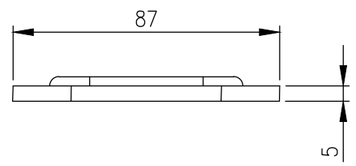

SIDE VIEW

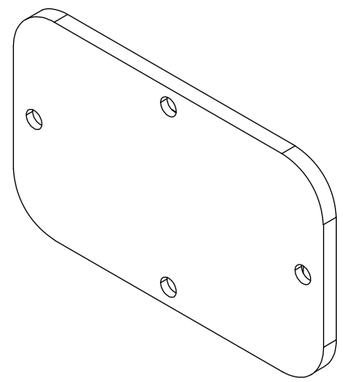

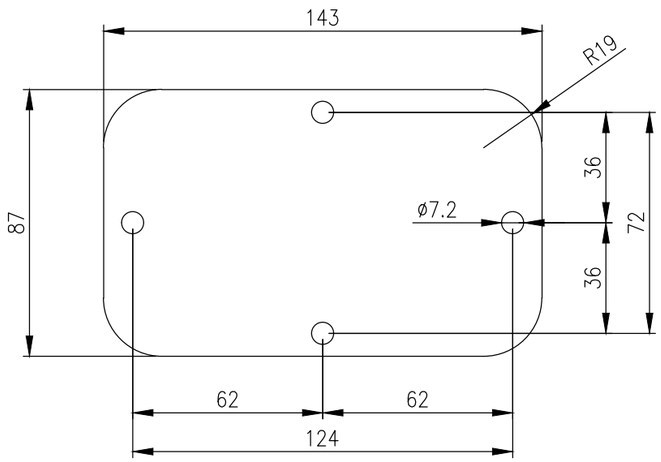

BOTTOM VIEW

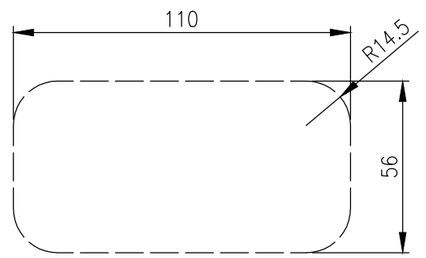

OPENING SIZE

MATERIAL
BODY: 5.0mm MARINE GRADE ALUMINIUM 5754-H111
MASS: 0.2Kg.

© IP ENCLOSURES 2026.
THIS DRAWING SHALL NOT BE COPIED OR REPRODUCED
WITHOUT AUTHORISATION FROM IP ENCLOSURES.
www.ipenclosures.com.au

Itemref	Quantity	Title/Name, designation, material, dimension etc		Article No./Reference	
Designed by IP	Checked by IP	Approved by - date 06/05/26	Filename IP-GPA5-1	Date 06/05/26	Scale 1:2

Enclosures

143Wx87D ALUMINIUM GLAND PLATE

IP-GPA5-1 | Edition 0 | Sheet 1/1