RevNo	Revision note	Date	Signature	Checked

TOP VIEW

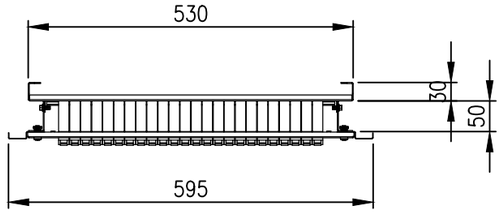

TOP–INTERIOR
DISTRIBUTION KIT DETAIL

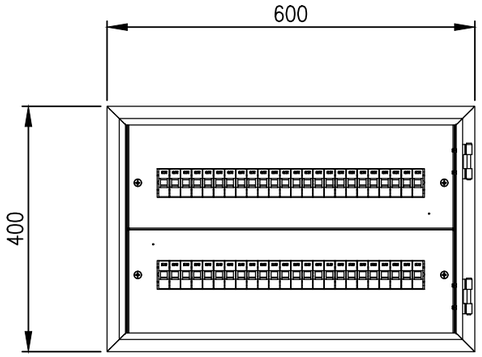

FRONT VIEW–DOOR REMOVED

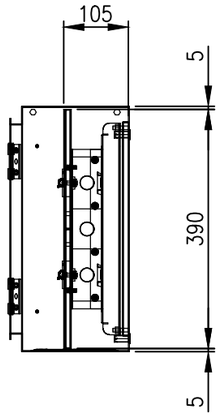

RIGHT SIDE VIEW

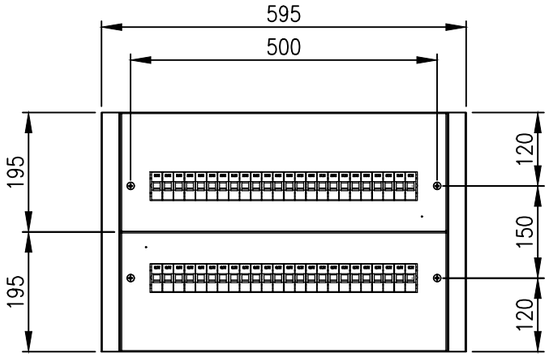

FRONT–INTERIOR
DISTRIBUTION KIT DETAIL

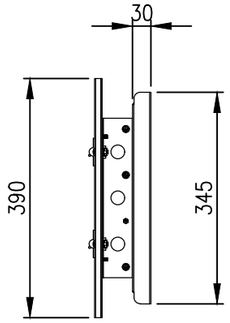

RIGHT SIDE–INTERIOR
DISTRIBUTION KIT DETAIL

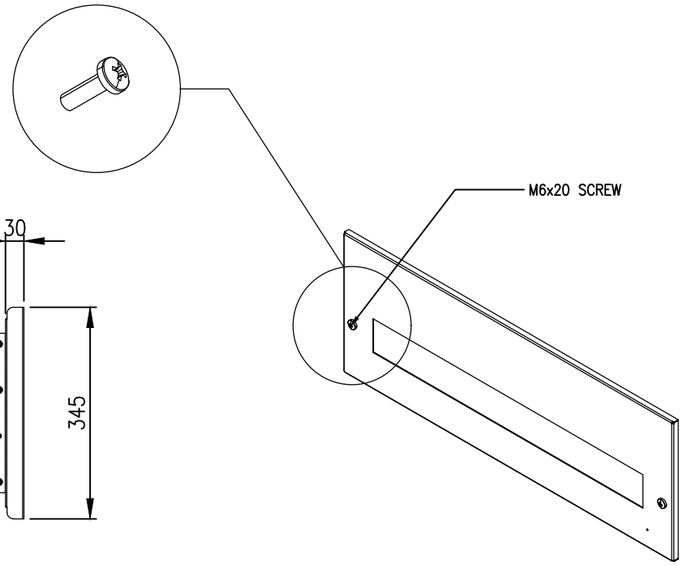

SCREW–SPOT DETAIL

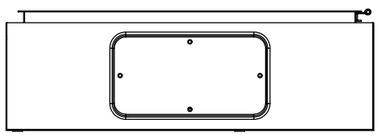

BOTTOM VIEW

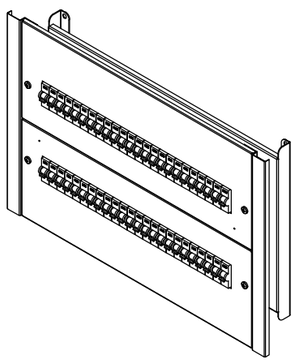

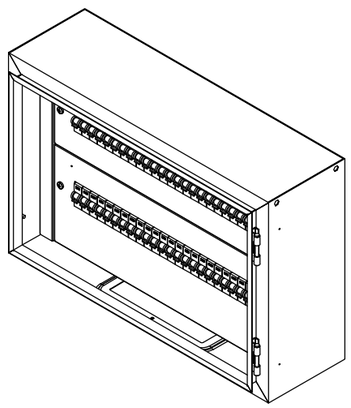

MATERIAL
CHASSIS: GALVANISED STEEL
ESCUTCHEONS: GALVANISED STEEL
SLOTTED DIN RAIL: ELECTROGALVANISED STEEL
7.5x35x2M RoHS COMPLIANT

ESCUTCHEON SURFACE TREATMENT: POWDER–COAT
80–120 MICRON
STANDARD COLOUR: RAL7035

© IP ENCLOSURES 2022.
THIS DRAWING SHALL NOT BE COPIED OR REPRODUCED WITHOUT AUTHORISATION FROM IP ENCLOSURES.
www.ipenclosures.com.au

Itemref	Quantity	Title/Name, designation, material, dimension etc			Article No./Reference	
Designed by IP		Checked by IP	Approved by - date 20/12/22	Filename IP–DB48	Date 20/12/22	Scale 1:10
Enclosures		390Hx595W 48–POLE STEEL DB KIT				
		IP–DB48			Edition 0	Sheet 1/1