RevNo	Revision note	Date	Signature	Checked
1	GENERAL REVISION	09/06/26	IP	IP

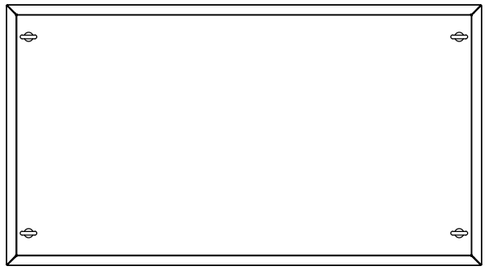

TOP VIEW

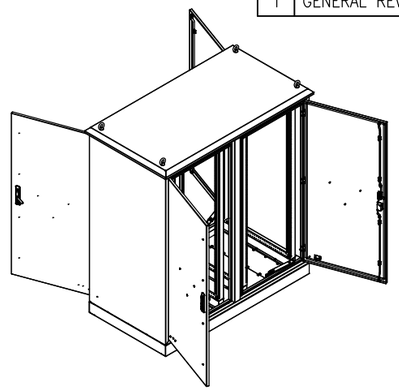

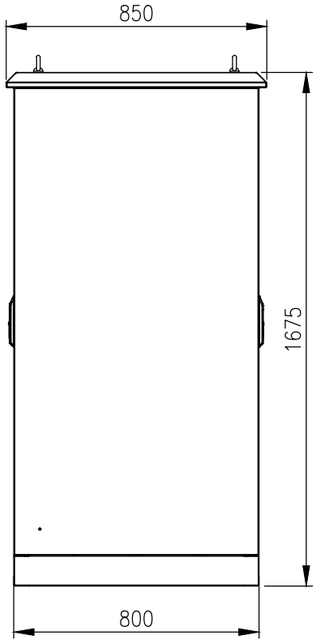

SIDE VIEW

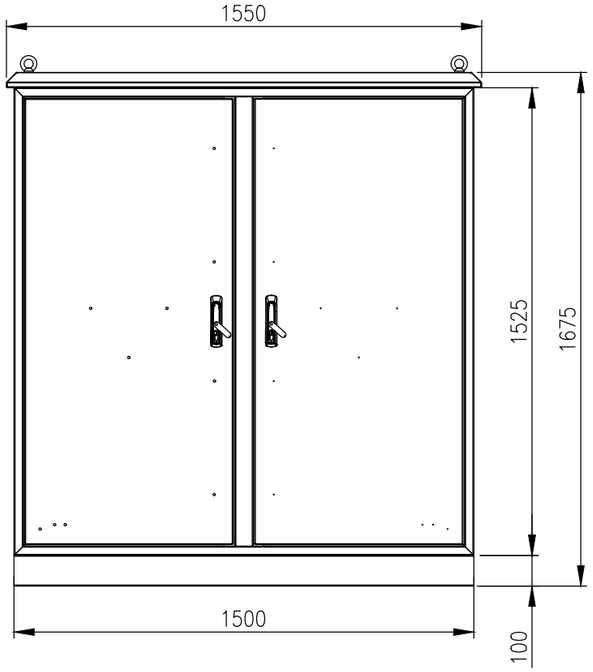

FRONT VIEW

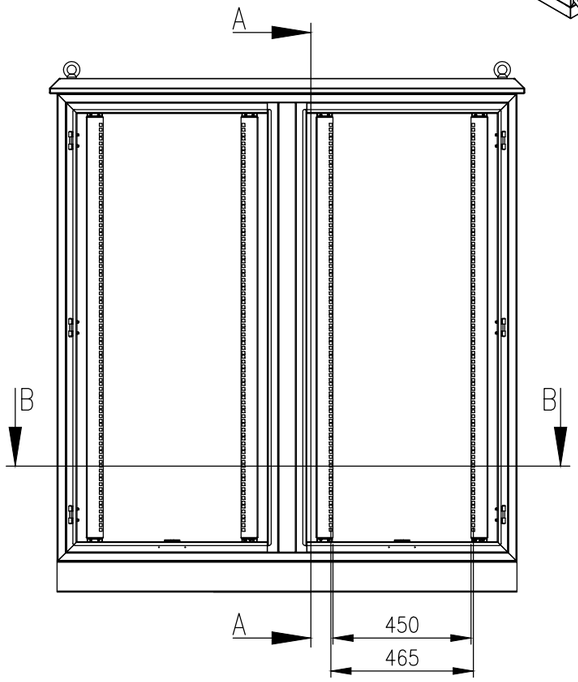

INTERIOR VIEW–DOOR REMOVED

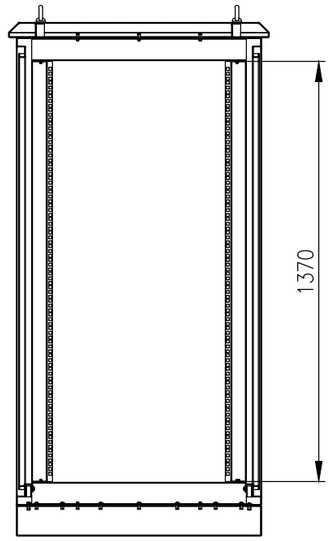

SECTION A–A

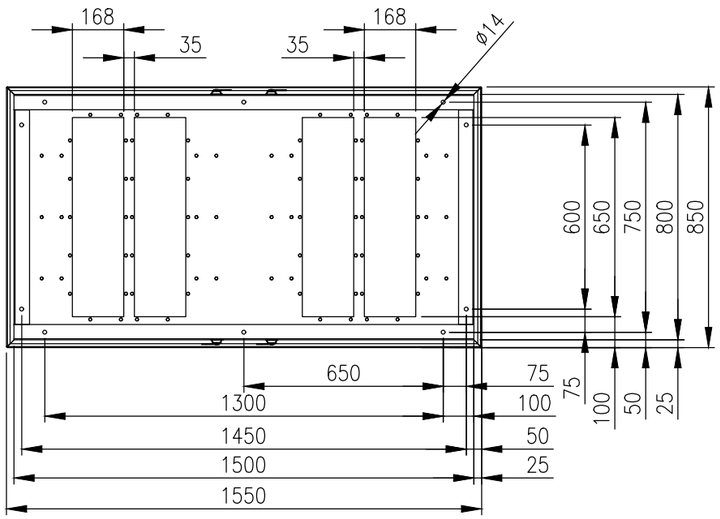

BOTTOM VIEW

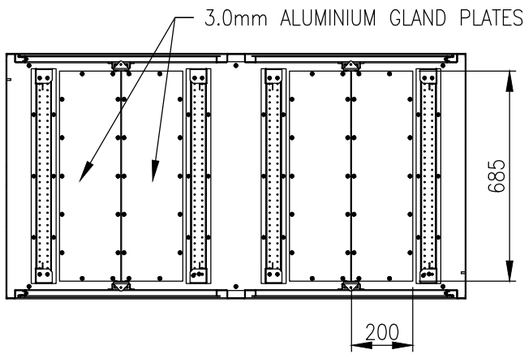

SECTION B–B

MATERIAL
BODY AND PLINTH: 2.5mm MARINE GRADE ALUMINIUM
DOORS: 2.5mm MARINE GRADE ALUMINIUM
19" DATA RAILS: 1.5mm GALVANISED STEEL SHEET
GLAND PLATE: 3.0mm ALUMINIUM
SEAL: POLYURETHANE
SURFACE TREATMENT: POWDER–COAT 80–120micron
COLOUR: RAL7035 GREY, SMOOTH FINISH

PROTECTION: IP66 IK10
STANDARD: IEC/EN62208, IEC/EN/AS60529, EIA–310D

© IP ENCLOSURES 2024.
THIS DRAWING SHALL NOT BE COPIED OR REPRODUCED WITHOUT AUTHORISATION FROM IP ENCLOSURES.
www.ipenclosures.com.au

Itemref	Quantity	Title/Name, designation, material, dimension etc		Article No./Reference	
Designed by IP	Checked by IP	Approved by - date 10/01/24	Filename IP–A16715080–0	Date 10/01/24	Scale 1:20

IP Enclosures

2 x 30RU (60RU) ALUMINIUM FIELD CABINET 1675Hx1500Wx800D DOUBLE BAY

IP–A16715080–0 | Edition 1 | Sheet 1/1