RevNo	Revision note	Date	Signature	Checked
1	GENERAL REVISION	19/08/25	IP	IP

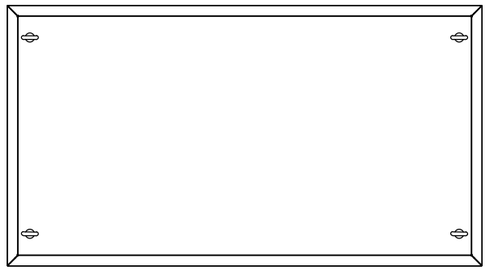

TOP VIEW

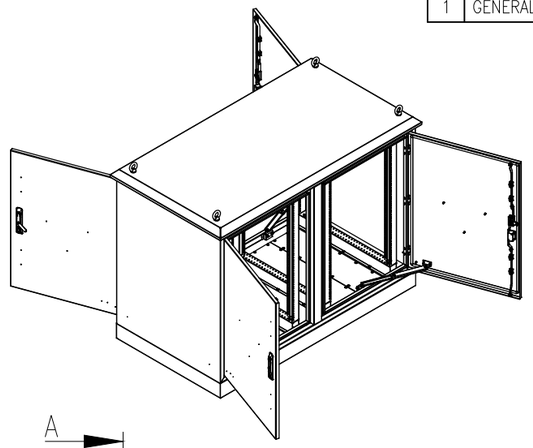

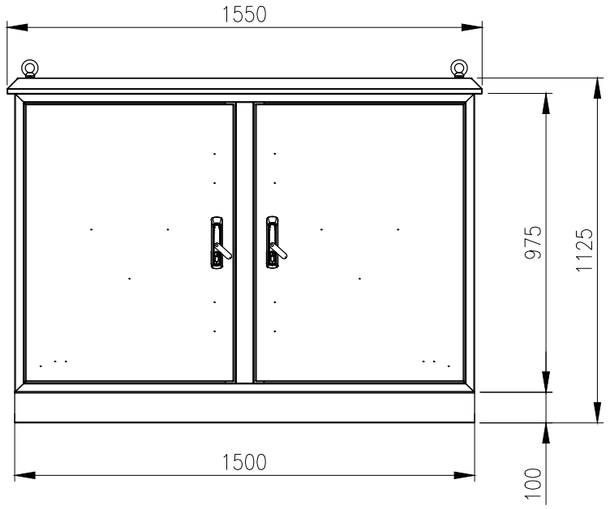

FRONT VIEW

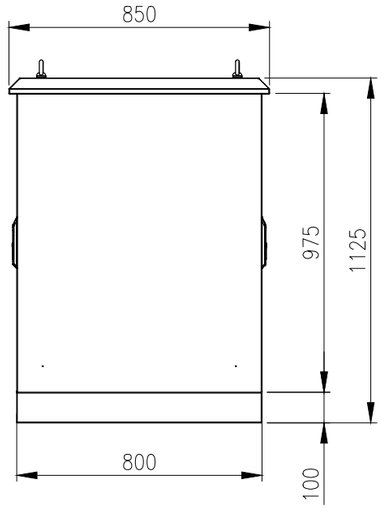

RIGHT SIDE VIEW

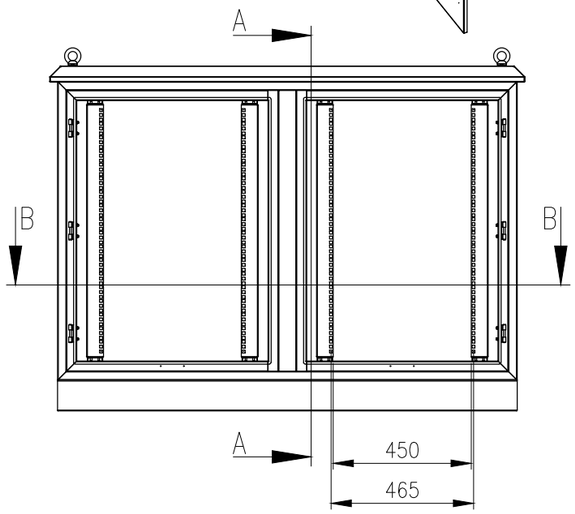

INTERIOR VIEW–DOOR REMOVED

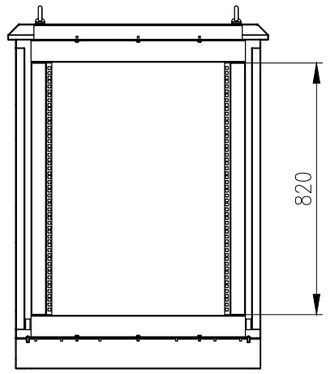

SECTION A–A

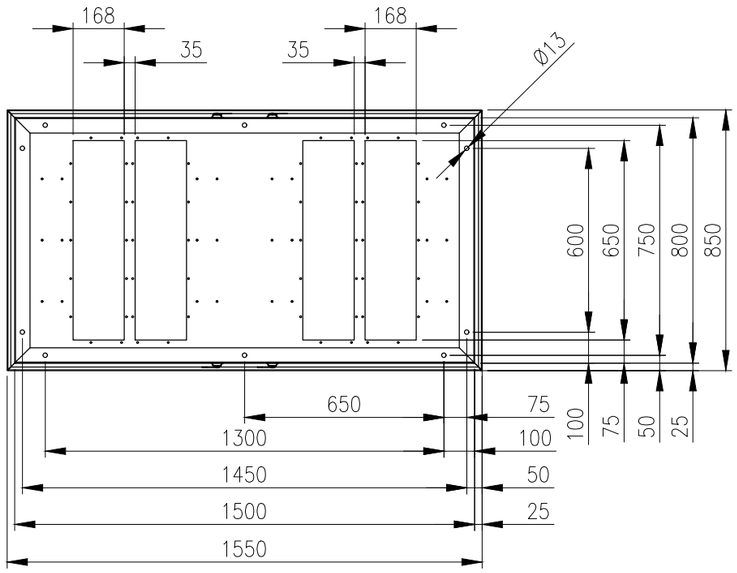

BOTTOM VIEW

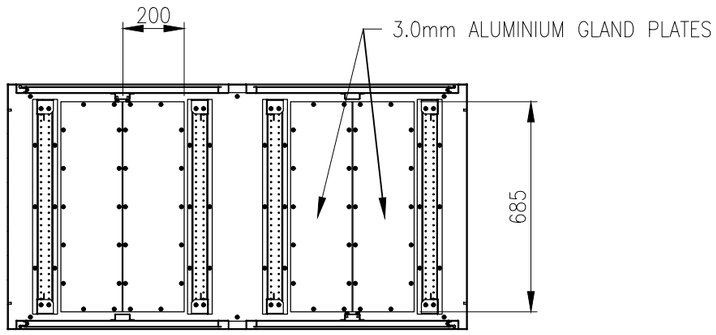

SECTION B–B

MATERIAL
BODY AND PLINTH: 2.0mm GALVANISED STEEL SHEET
DOORS: 2.0mm GALVANISED STEEL SHEET
19" DATA RAILS: 1.5mm GALVANISED STEEL SHEET
GLAND PLATE: 3.0mm ALUMINIUM
SEAL: POLYURETHANE
SURFACE TREATMENT: POWDER–COAT 80–120micron
COLOUR: RAL7035 GREY, SMOOTH FINISH

PROTECTION: IP55 IK10 (EXCLUDING FAN/
FILTER CUTOUTS)
STANDARD: IEC/EN62208, IEC/EN/AS60529, EIA–310D

© IP ENCLOSURES 2023.
THIS DRAWING SHALL NOT BE COPIED OR REPRODUCED
WITHOUT AUTHORISATION FROM IP ENCLOSURES.
www.ipenclosures.com.au

Itemref	Quantity	Title/Name, designation, material, dimension etc		Article No./Reference	
Designed by IP		Checked by IP	Approved by - date 09/11/23	Filename IP–10715080–0	Date 09/11/23	Scale 1:20

Enclosures

2x18U (36U) FIELD CABINET 1075Hx1500Wx800D DOUBLE BAY

IP–10715080–0 | Edition 1 | Sheet 1/1