RevNo	Revision note	Date	Signature	Checked
	GENERAL REVISION		IP	IP

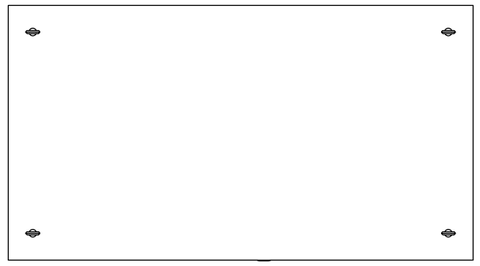

TOP VIEW

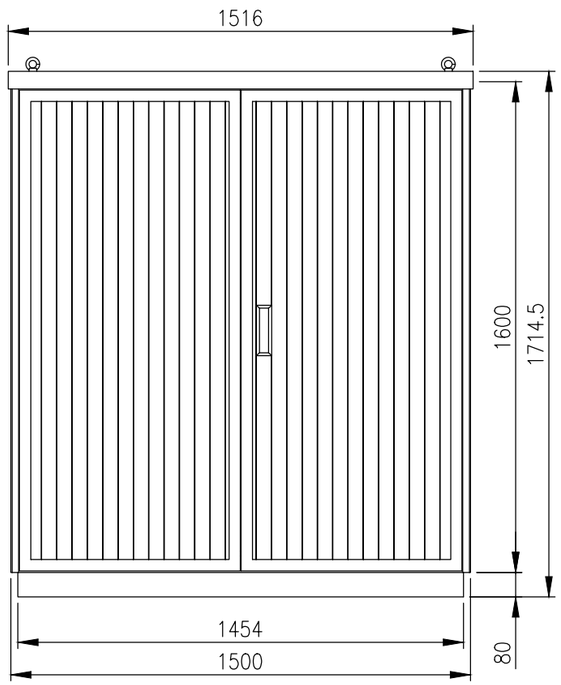

FRONT VIEW

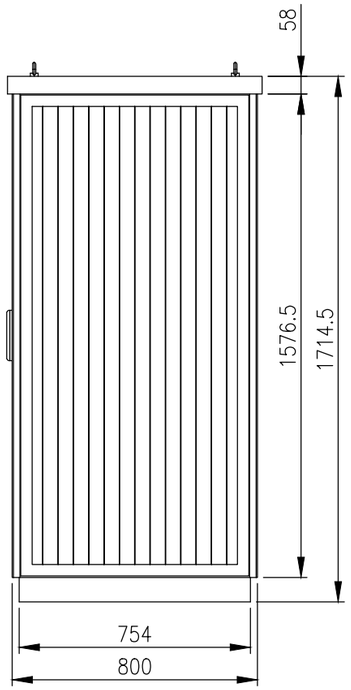

SIDE VIEW

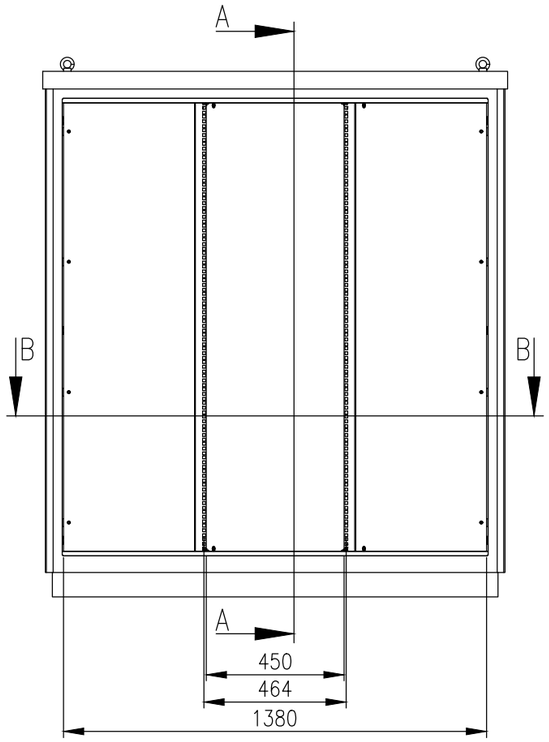

FRONT VIEW–DOOR REMOVED

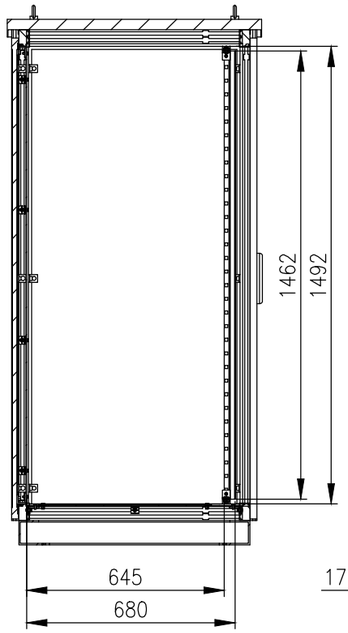

SECTION A–A

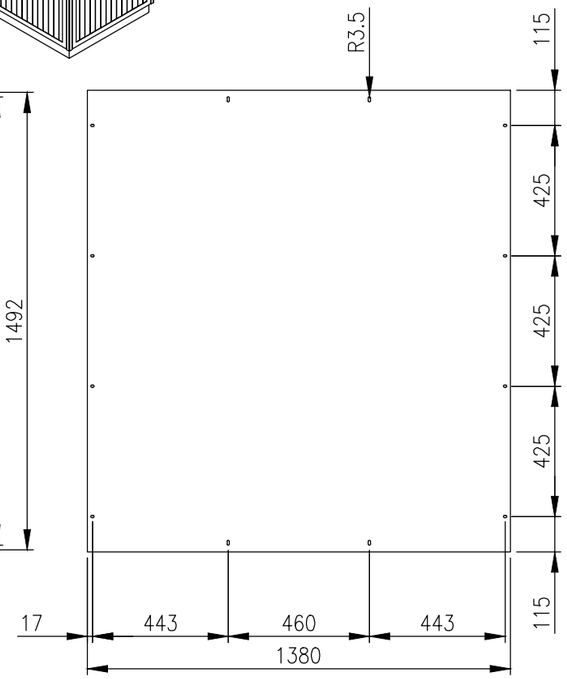

DEVICE MOUNTING PLATE

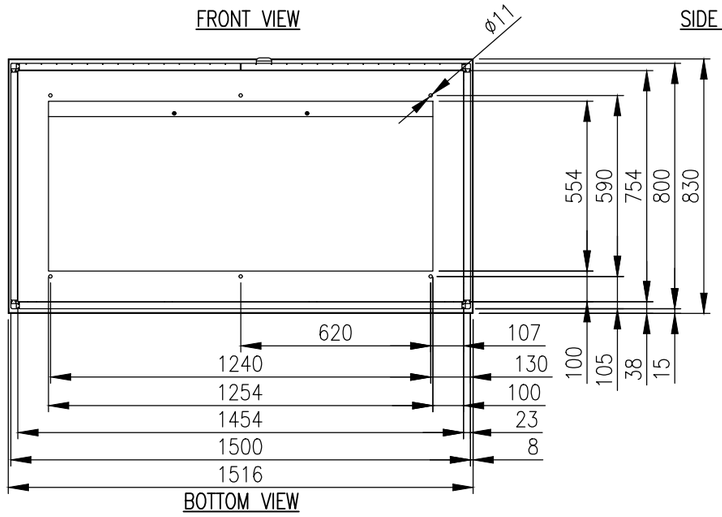

BOTTOM VIEW

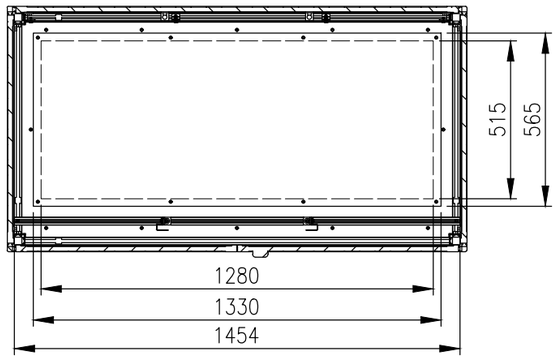

SECTION B–B

MATERIAL
BODY: DOUBLE–WALL ALUMINIUM
DOORS: DOUBLE–WALL ALUMINIUM
PLINTH: ALUMINIUM
MOUNTING PLATE: ALUMINIUM
19" RAILS: STAINLESS STEEL
GLAND PLATE: 3.0mm ALUMINIUM
SEAL: EPDM ELASTOMER SYNTHETIC SEAL
SURFACE TREATMENT: POWDER COATED
COLOUR: RAL7035 LIGHT GREY

MASS: 527Kg.

PROTECTION: IP55 IK10
STANDARD: IEC/EN62208, IEC/EN60529

© IP ENCLOSURES 2026.
THIS DRAWING SHALL NOT BE COPIED OR REPRODUCED
WITHOUT AUTHORISATION FROM IP ENCLOSURES.
www.ipenclosures.com.au

Itemref	Quantity	Title/Name, designation, material, dimension etc			Article No./Reference
Designed by IP	Checked by IP	Approved by - date 19/08/26	Filename ALM–ANK16015080	Date 19/08/26	Scale 1:20

IP Enclosures

1600x1500x800 FLOOR MOUNTED DOUBLE WALL ALUM. CABINET

ALM–ANK16015080 | Edition 0 | Sheet 1/1